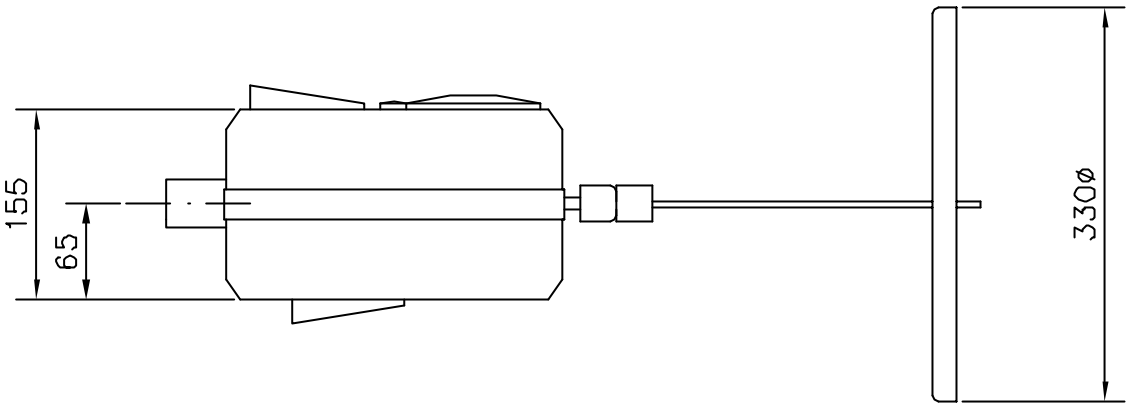


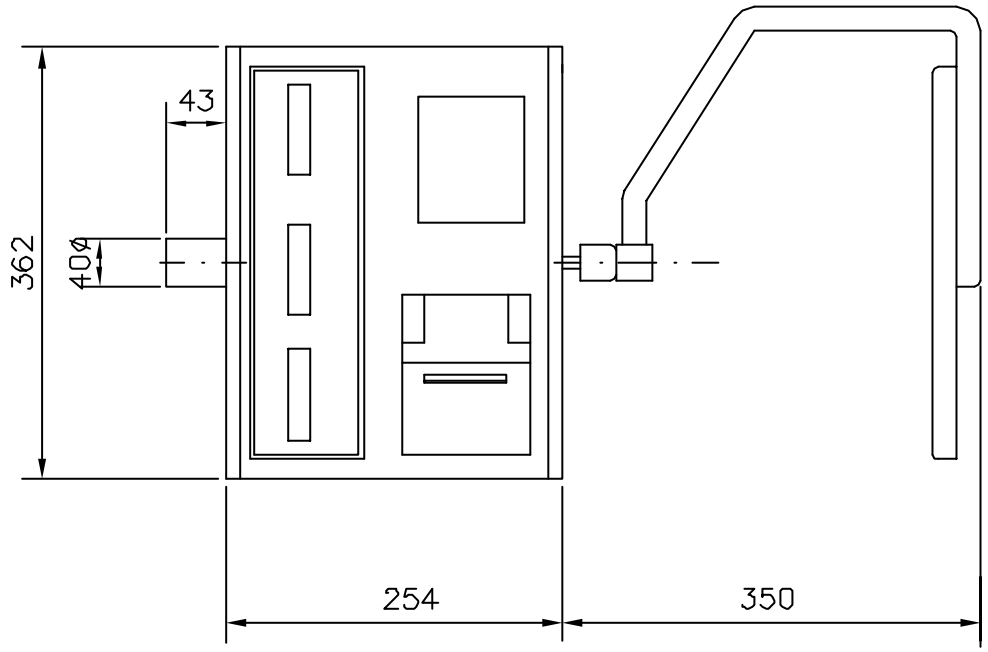


| | | | | |
|---|---|---|---|---|
| Confirm. | | | Anotaciones | EPELSA |
| Disef. | 20-2-05 | JAVIER | | |
| | PAPA | Nombre | | |
| Material | | | Denominación | 76003011 |
| Referencia | | | 12 IV2-T.APS.INOX | |
| | | | | |